THUMM OELHYDRAULISCHE ANTRIEBE

Rotator Type 620H-1/4-15-G1"

4.620.08

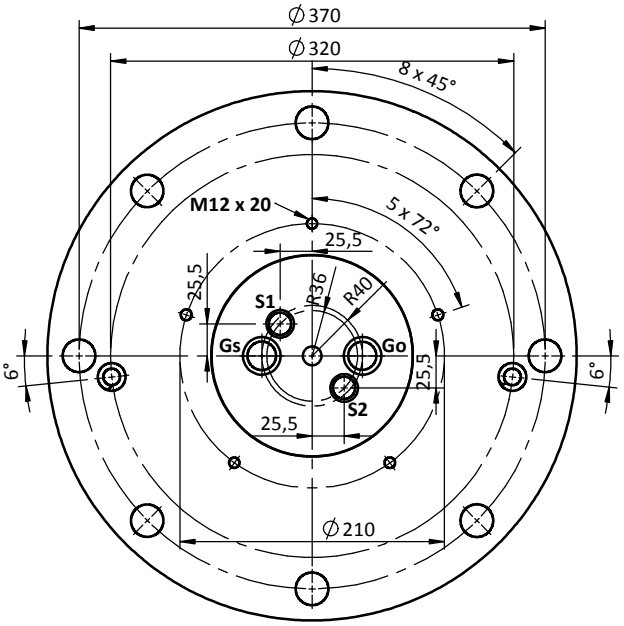

Variant design:

- Stator with 12 x M24 / PCD Ø265
- asymmetrical hole pattern
- 4 Oil passages for grap + special funktions
- Center channel Ø15 for cable passage
- 2 pressure limit valve for rotation

Volume of delivery:

- 2 Sealing ring Nr.116 Artikel-Nr. 1.02.149
- 2 Sealing ring Nr.213 Artikel-Nr. 1.02.130
- 4 Connex-pin SG 22x30 Artikel-Nr. 1.04.003

Optional equipment:

- Oil manifold O3 on request
- 2 pressure limit valves on request

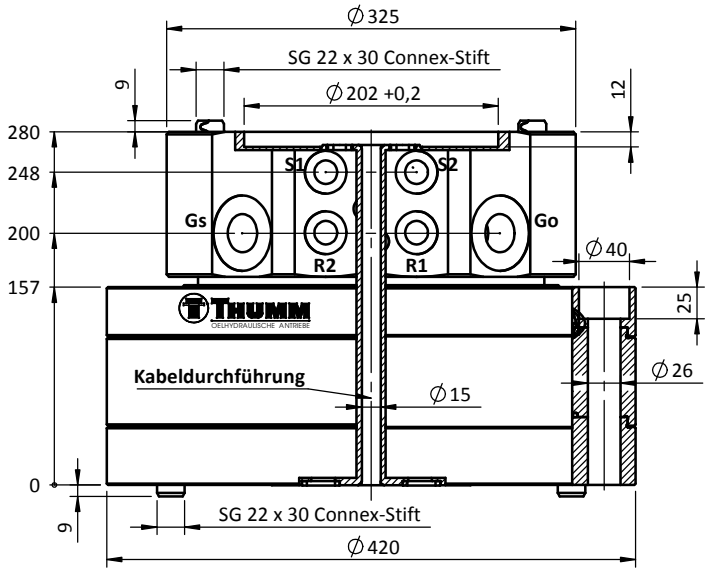

Maschine:

e.g. hydraulic excavator service weight:
For oscillating fixtion up to 40 t.
For rigid fixation up to 27 to.

Accessory equipment:

Double shell type grab up to 2,5m³
Multiple shell type grap up to 1,2m³
Demolition and sort grap up to own weight max. 1,3 t.
Special devices on request.

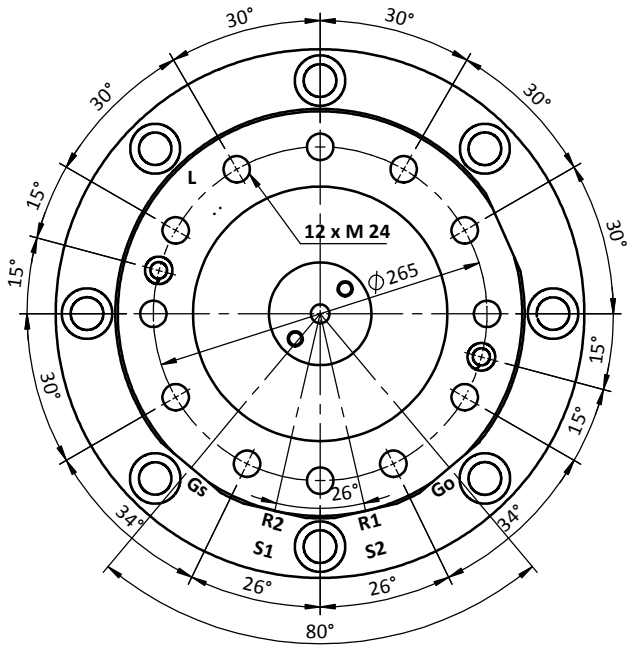

Technical details:

max. axial load:	= 200 kN
max. radial load:	= 140 kN
Pmax. grap	= 35 MPa
Pmax. Rotator	= 25 MPa
Torque per 1 MPa	= 250 Nm
Torque per 25 MPa	= 6250 Nm
Displacement	= 1850 cm³/r
min. Oil passage Gs/Go	= DN 18
min. Oil passage S1/S2	= DN 10
Cable passage	= Ø15 mm
Mass	= 213 kg
max. speed	= 30 rpm

Connections:

R1,R2: Rotation right/left turn	G 1/2"
Go: open grap	G 1"
Gs: close grap	G 1"
S1, S2: zusätzlicher Öldurchgang	G 1/2"
L: meassuring connection	G 1/4"

Paint: black primery coat

Edition August 1st 2017. Copyrighted.